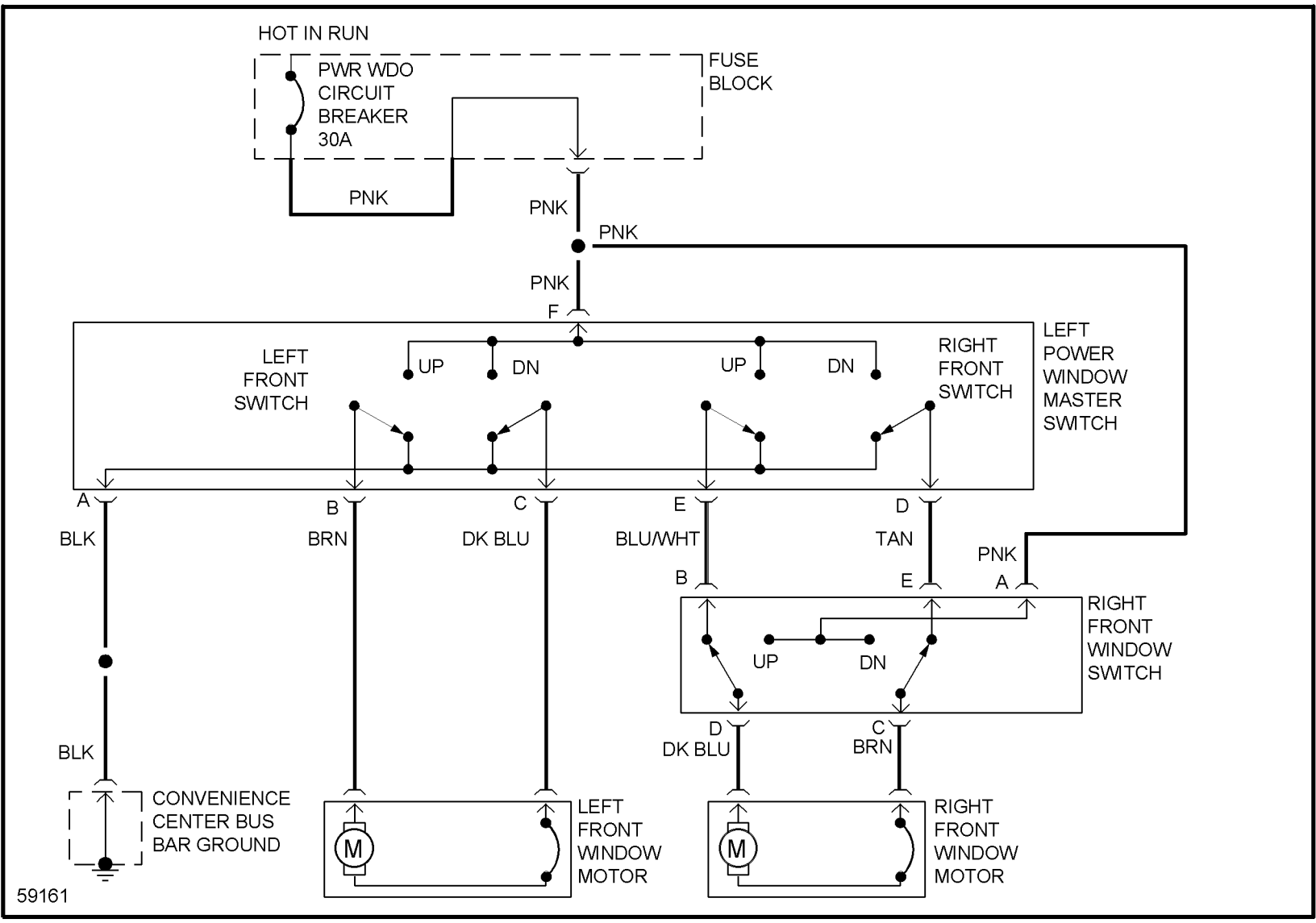
HOT IN RUN
PWR WDO
CIRCUIT
BREAKER
30A
FUSE
BLOCK
PNK
PNK
PNK
PNK
F
LEFT
FRONT
SWITCH
UP
DN
UP
DN
RIGHT
FRONT
SWITCH
LEFT
POWER
WINDOW
MASTER
SWITCH
A
B
C
E
D
BLK
BRN
DK BLU
BLU/WHT
TAN
PNK
B
E
A
RIGHT
FRONT
WINDOW
SWITCH
UP
DN
D
DK BLU
C
BRN
BLK
CONVENIENCE
CENTER BUS
BAR GROUND
M
LEFT
FRONT
WINDOW
MOTOR
M
RIGHT
FRONT
WINDOW
MOTOR
59161