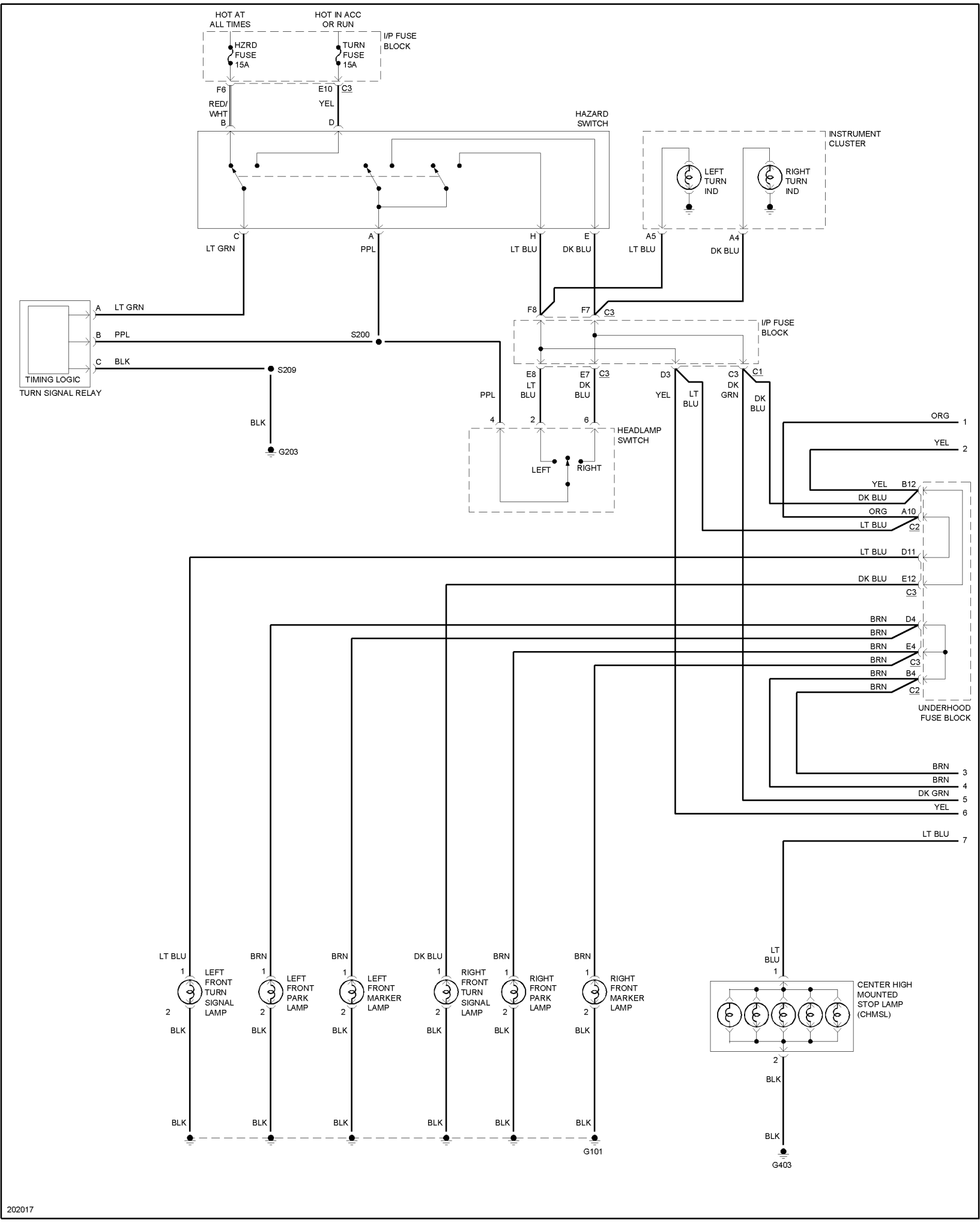
HOT AT ALL TIMES
HOT IN ACC OR RUN
I/P FUSE BLOCK
HZRD FUSE 15A
TURN FUSE 15A
F6
E10
C3
RED/ WHT
YEL
B
D
HAZARD SWITCH
INSTRUMENT CLUSTER
LEFT TURN IND
RIGHT TURN IND
C
A
H
E
A5
A4
LT GRN
PPL
LT BLU
DK BLU
LT BLU
DK BLU
A
LT GRN
B
PPL
S200
C
BLK
S209
TIMING LOGIC
TURN SIGNAL RELAY
BLK
G203
F8
F7
C3
I/P FUSE BLOCK
E8
LT BLU
E7
DK BLU
C3
D3
YEL
LT BLU
C3
DK GRN
C1
DK BLU
PPL
4
2
6
HEADLAMP SWITCH
LEFT
RIGHT
ORG
1
YEL
2
YEL
B12
DK BLU
ORG
A10
LT BLU
C2
LT BLU
D11
DK BLU
E12
C3
BRN
D4
BRN
BRN
E4
BRN
C3
BRN
B4
BRN
C2
UNDERHOOD FUSE BLOCK
BRN
3
BRN
4
DK GRN
5
YEL
6
LT BLU
7
LT BLU
1
2
LEFT FRONT TURN SIGNAL LAMP
BRN
LEFT FRONT PARK LAMP
BRN
LEFT FRONT MARKER LAMP
DK BLU
RIGHT FRONT TURN SIGNAL LAMP
BRN
RIGHT FRONT PARK LAMP
BRN
RIGHT FRONT MARKER LAMP
LT BLU
CENTER HIGH MOUNTED STOP LAMP (CHMSL)
BLK
BLK
BLK
BLK
BLK
BLK
BLK
BLK
BLK
BLK
BLK
BLK
BLK
BLK
G101
BLK
BLK
G403

202017