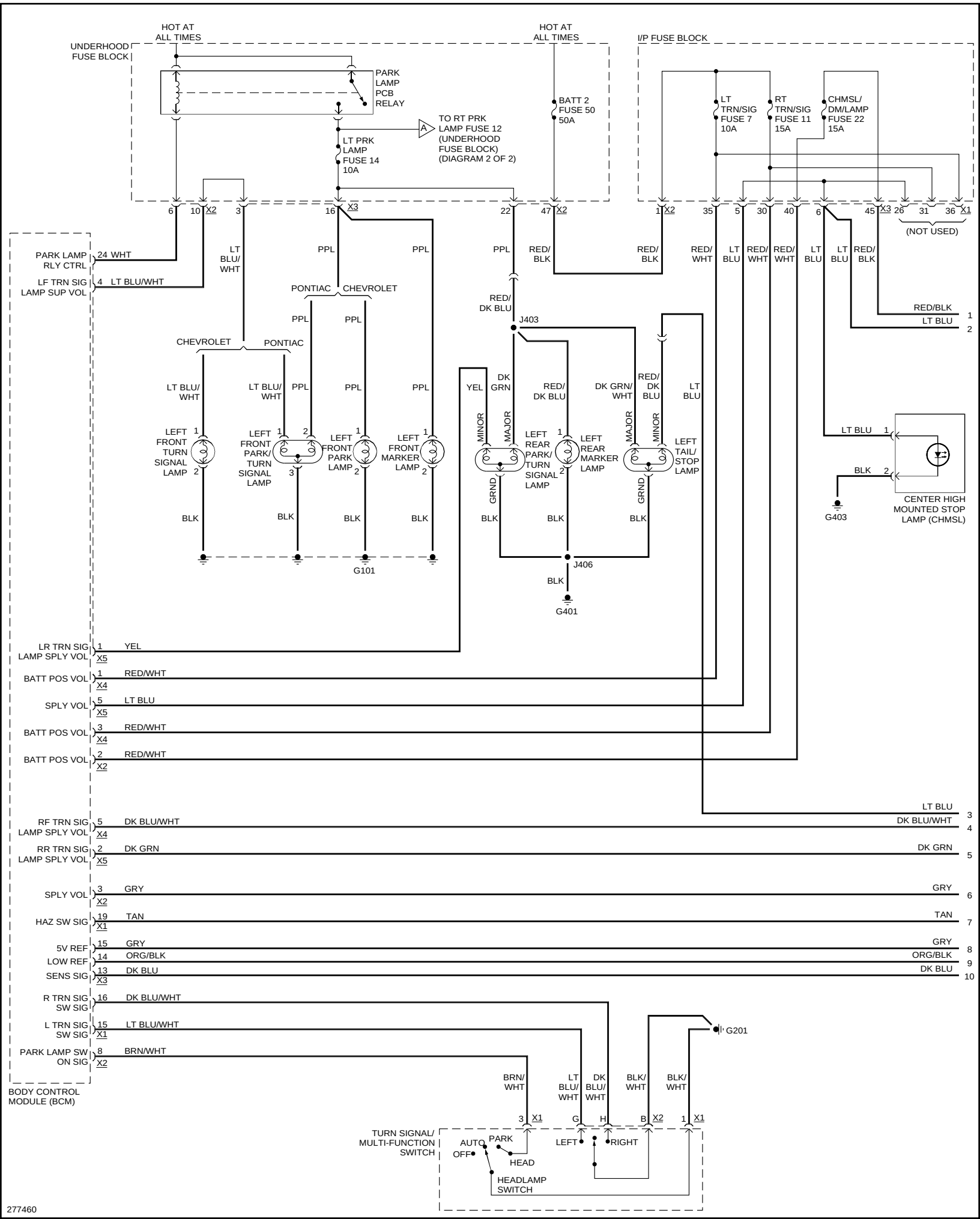
HOT AT ALL TIMES
UNDERHOOD FUSE BLOCK
PARK LAMP PCB RELAY
LT PRK LAMP FUSE 14 10A
TO RT PRK LAMP FUSE 12 (UNDERHOOD FUSE BLOCK) (DIAGRAM 2 OF 2)
HOT AT ALL TIMES
BATT 2 FUSE 50 50A
I/P FUSE BLOCK
LT TRN/SIG FUSE 7 10A
RT TRN/SIG FUSE 11 15A
CHMSL/ DM/LAMP FUSE 22 15A
(NOT USED)
PARK LAMP RLY CTRL
LF TRN SIG LAMP SUP VOL
PONTIAC
CHEVROLET
LEFT FRONT TURN SIGNAL LAMP
LEFT FRONT PARK/ TURN SIGNAL LAMP
LEFT FRONT PARK LAMP
LEFT FRONT MARKER LAMP
LEFT REAR PARK/ TURN SIGNAL LAMP
LEFT REAR MARKER LAMP
LEFT TAIL/ STOP LAMP
MINOR
MAJOR
CENTER HIGH MOUNTED STOP LAMP (CHMSL)
G101
G401
G403
J403
J406
LR TRN SIG LAMP SPLY VOL
BATT POS VOL
SPLY VOL
RF TRN SIG LAMP SPLY VOL
RR TRN SIG LAMP SPLY VOL
HAZ SW SIG
5V REF
LOW REF
SENS SIG
R TRN SIG SW SIG
L TRN SIG SW SIG
PARK LAMP SW ON SIG
BODY CONTROL MODULE (BCM)
G201
TURN SIGNAL/ MULTI-FUNCTION SWITCH
AUTO
PARK
OFF
HEAD
HEADLAMP SWITCH
LEFT
RIGHT
277460