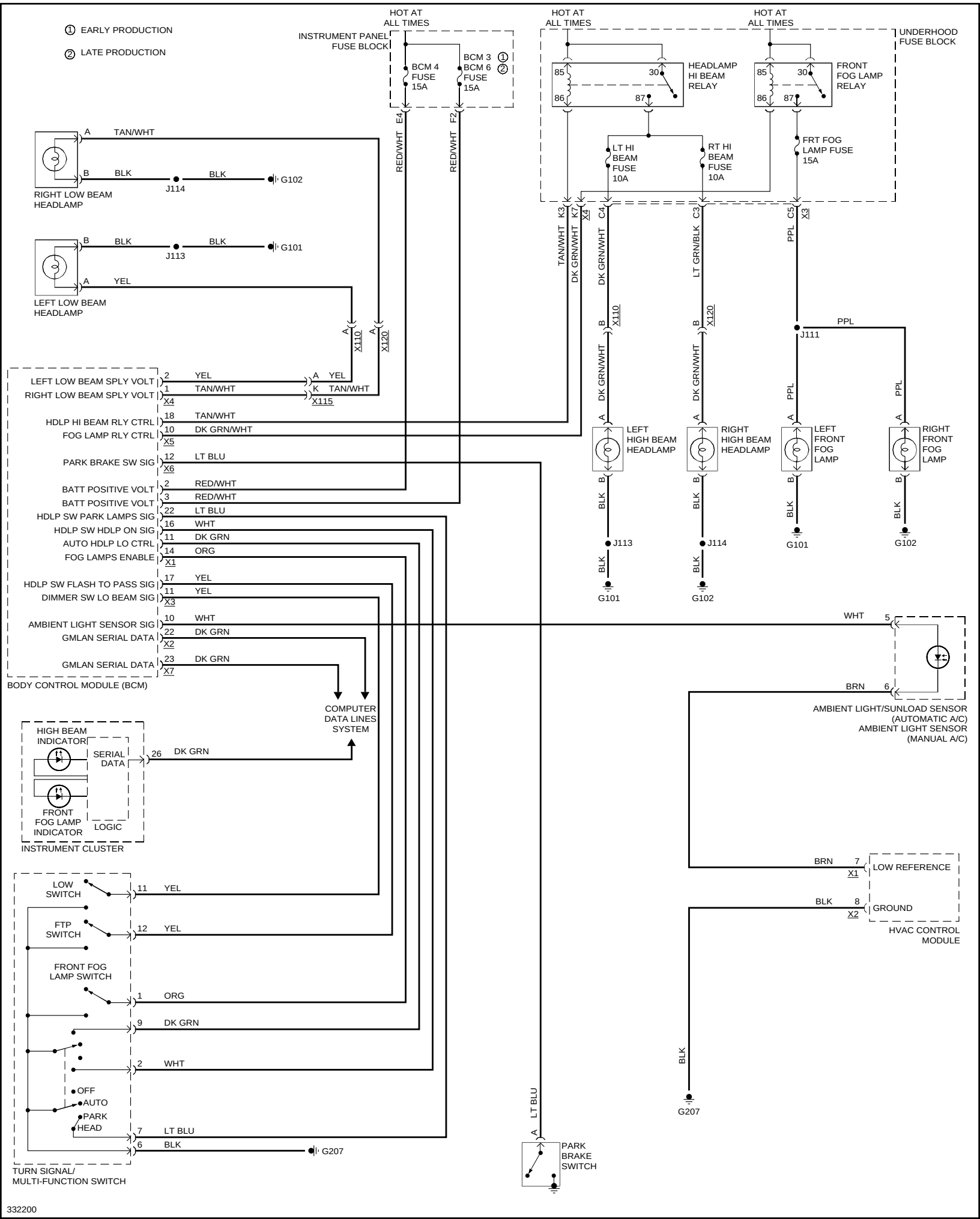
① EARLY PRODUCTION
② LATE PRODUCTION
HOT AT ALL TIMES
INSTRUMENT PANEL FUSE BLOCK
BCM 4 FUSE 15A
BCM 3 ① BCM 6 ② FUSE 15A
HOT AT ALL TIMES
HOT AT ALL TIMES
UNDERHOOD FUSE BLOCK
HEADLAMP HI BEAM RELAY
FRONT FOG LAMP RELAY
LT HI BEAM FUSE 10A
RT HI BEAM FUSE 10A
FRT FOG LAMP FUSE 15A
RIGHT LOW BEAM HEADLAMP
LEFT LOW BEAM HEADLAMP
TAN/WHT
BLK
YEL
G102
G101
J114
J113
J111
PPL
RED/WHT
TAN/WHT
DK GRN/WHT
LT GRN/BLK
X110
X120
X115
LEFT LOW BEAM SPLY VOLT
RIGHT LOW BEAM SPLY VOLT
HDLP HI BEAM RLY CTRL
FOG LAMP RLY CTRL
PARK BRAKE SW SIG
BATT POSITIVE VOLT
BATT POSITIVE VOLT
HDLP SW PARK LAMPS SIG
HDLP SW HDLP ON SIG
AUTO HDLP LO CTRL
FOG LAMPS ENABLE
HDLP SW FLASH TO PASS SIG
DIMMER SW LO BEAM SIG
AMBIENT LIGHT SENSOR SIG
GMLAN SERIAL DATA
GMLAN SERIAL DATA
BODY CONTROL MODULE (BCM)
LT BLU
WHT
DK GRN
ORG
LEFT HIGH BEAM HEADLAMP
RIGHT HIGH BEAM HEADLAMP
LEFT FRONT FOG LAMP
RIGHT FRONT FOG LAMP
AMBIENT LIGHT/SUNLOAD SENSOR (AUTOMATIC A/C)
AMBIENT LIGHT SENSOR (MANUAL A/C)
COMPUTER DATA LINES SYSTEM
HIGH BEAM INDICATOR
SERIAL DATA
FRONT FOG LAMP INDICATOR
LOGIC
INSTRUMENT CLUSTER
LOW REFERENCE
GROUND
HVAC CONTROL MODULE
LOW SWITCH
FTP SWITCH
FRONT FOG LAMP SWITCH
OFF
AUTO
PARK
HEAD
TURN SIGNAL/ MULTI-FUNCTION SWITCH
PARK BRAKE SWITCH
G207
332200