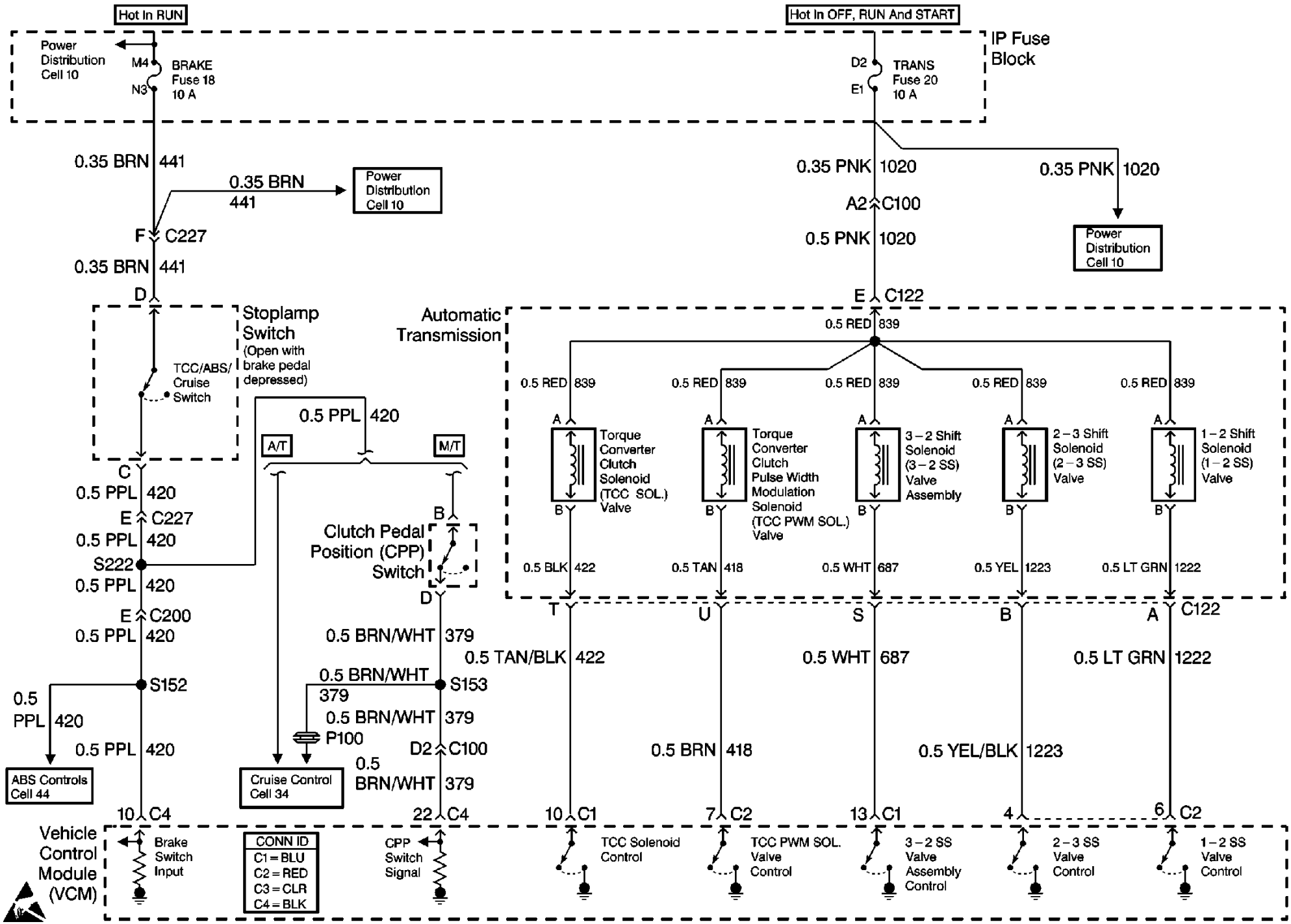
Hot In RUN
Hot In OFF, RUN And START
IP Fuse Block
Power Distribution Cell 10
M4
N3
BRAKE Fuse 18 10 A
D2
E1
TRANS Fuse 20 10 A
0.35 BRN 441
0.35 BRN 441
Power Distribution Cell 10
0.35 PNK 1020
A2 C100
0.5 PNK 1020
0.35 PNK 1020
Power Distribution Cell 10
F C227
0.35 BRN 441
D
E C122
Stoplamp Switch (Open with brake pedal depressed)
TCC/ABS/ Cruise Switch
Automatic Transmission
0.5 RED 839
0.5 RED 839
0.5 RED 839
0.5 RED 839
0.5 RED 839
0.5 RED 839
Torque Converter Clutch Solenoid (TCC SOL.) Valve
Torque Converter Clutch Pulse Width Modulation Solenoid (TCC PWM SOL.) Valve
3 – 2 Shift Solenoid (3 – 2 SS) Valve Assembly
2 – 3 Shift Solenoid (2 – 3 SS) Valve
1 – 2 Shift Solenoid (1 – 2 SS) Valve
0.5 PPL 420
A/T
M/T
C
0.5 PPL 420
E C227
0.5 PPL 420
S222
0.5 PPL 420
E C200
0.5 PPL 420
B
Clutch Pedal Position (CPP) Switch
D
0.5 BLK 422
0.5 TAN 418
0.5 WHT 687
0.5 YEL 1223
0.5 LT GRN 1222
T
U
S
B
A C122
0.5 BRN/WHT 379
0.5 TAN/BLK 422
0.5 WHT 687
0.5 LT GRN 1222
S152
0.5 BRN/WHT 379
S153
0.5 PPL 420
0.5 BRN/WHT 379
P100
0.5 PPL 420
D2 C100
0.5 BRN 418
0.5 YEL/BLK 1223
0.5 BRN/WHT 379
ABS Controls Cell 44
Cruise Control Cell 34
10 C4
22 C4
10 C1
7 C2
13 C1
4
6 C2
Vehicle Control Module (VCM)
Brake Switch Input
CONN ID
C1 = BLU
C2 = RED
C3 = CLR
C4 = BLK
CPP Switch Signal
TCC Solenoid Control
TCC PWM SOL. Valve Control
3 – 2 SS Valve Assembly Control
2 – 3 SS Valve Control
1 – 2 SS Valve Control