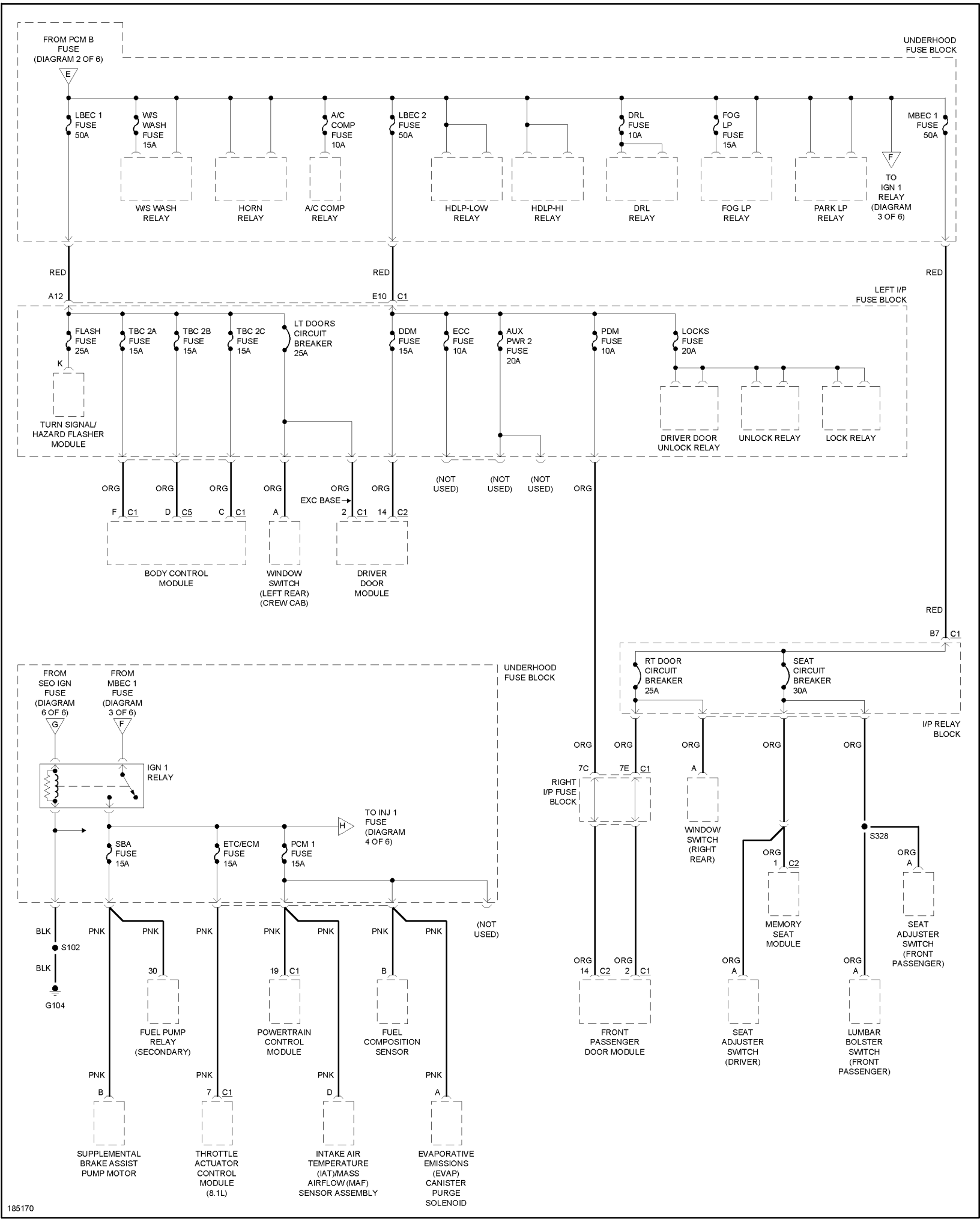
FROM PCM B FUSE (DIAGRAM 2 OF 6)
E
UNDERHOOD FUSE BLOCK
LBEC 1 FUSE 50A
W/S WASH FUSE 15A
A/C COMP FUSE 10A
LBEC 2 FUSE 50A
DRL FUSE 10A
FOG LP FUSE 15A
MBEC 1 FUSE 50A
F
TO IGN 1 RELAY (DIAGRAM 3 OF 6)
W/S WASH RELAY
HORN RELAY
A/C COMP RELAY
HDLP-LOW RELAY
HDLP-HI RELAY
DRL RELAY
FOG LP RELAY
PARK LP RELAY
RED
A12
E10
C1
LEFT I/P FUSE BLOCK
FLASH FUSE 25A
TBC 2A FUSE 15A
TBC 2B FUSE 15A
TBC 2C FUSE 15A
LT DOORS CIRCUIT BREAKER 25A
DDM FUSE 15A
ECC FUSE 10A
AUX PWR 2 FUSE 20A
PDM FUSE 10A
LOCKS FUSE 20A
K
TURN SIGNAL/ HAZARD FLASHER MODULE
DRIVER DOOR UNLOCK RELAY
UNLOCK RELAY
LOCK RELAY
ORG
F C1
D C5
C C1
A
EXC BASE
2 C1
14 C2
(NOT USED)
BODY CONTROL MODULE
WINDOW SWITCH (LEFT REAR) (CREW CAB)
DRIVER DOOR MODULE
B7 C1
RT DOOR CIRCUIT BREAKER 25A
SEAT CIRCUIT BREAKER 30A
I/P RELAY BLOCK
FROM SEO IGN FUSE (DIAGRAM 6 OF 6)
G
FROM MBEC 1 FUSE (DIAGRAM 3 OF 6)
IGN 1 RELAY
H
TO INJ 1 FUSE (DIAGRAM 4 OF 6)
SBA FUSE 15A
ETC/ECM FUSE 15A
PCM 1 FUSE 15A
7C
7E C1
RIGHT I/P FUSE BLOCK
WINDOW SWITCH (RIGHT REAR)
S328
1 C2
MEMORY SEAT MODULE
SEAT ADJUSTER SWITCH (FRONT PASSENGER)
BLK
S102
G104
PNK
30
19 C1
B
14 C2
2 C1
FUEL PUMP RELAY (SECONDARY)
POWERTRAIN CONTROL MODULE
FUEL COMPOSITION SENSOR
FRONT PASSENGER DOOR MODULE
SEAT ADJUSTER SWITCH (DRIVER)
LUMBAR BOLSTER SWITCH (FRONT PASSENGER)
7 C1
D
SUPPLEMENTAL BRAKE ASSIST PUMP MOTOR
THROTTLE ACTUATOR CONTROL MODULE (8.1L)
INTAKE AIR TEMPERATURE (IAT)/MASS AIRFLOW (MAF) SENSOR ASSEMBLY
EVAPORATIVE EMISSIONS (EVAP) CANISTER PURGE SOLENOID
185170