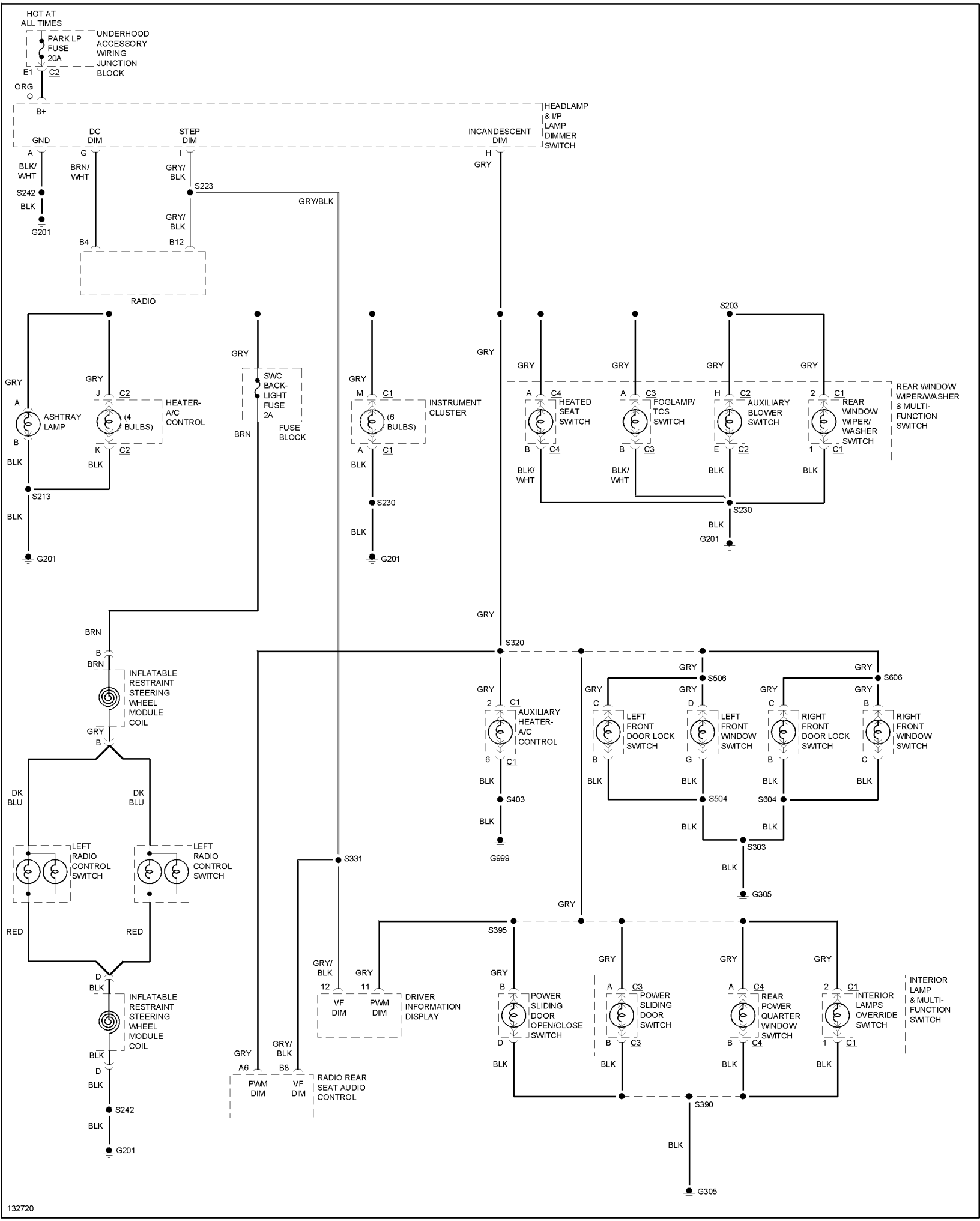
HOT AT ALL TIMES
PARK LP FUSE 20A
UNDERHOOD ACCESSORY WIRING JUNCTION BLOCK
E1
C2
ORG
O
B+
HEADLAMP & I/P LAMP DIMMER SWITCH
GND
DC DIM
STEP DIM
INCANDESCENT DIM
A
G
I
H
BLK/ WHT
BRN/ WHT
GRY/ BLK
GRY
S242
BLK
G201
S223
GRY/BLK
GRY/ BLK
B4
B12
RADIO
S203
GRY
SWC BACK-LIGHT FUSE 2A
FUSE BLOCK
BRN
ASHTRAY LAMP
HEATER-A/C CONTROL
(4 BULBS)
J
K
S213
INSTRUMENT CLUSTER
(6 BULBS)
M
S230
HEATED SEAT SWITCH
FOGLAMP/ TCS SWITCH
AUXILIARY BLOWER SWITCH
REAR WINDOW WIPER/ WIPER/ WASHER SWITCH
REAR WINDOW WIPER/WASHER & MULTI-FUNCTION SWITCH
C4
C3
C2
C1
BRN
INFLATABLE RESTRAINT STEERING WHEEL MODULE COIL
S320
DK BLU
LEFT RADIO CONTROL SWITCH
RED
AUXILIARY HEATER-A/C CONTROL
S403
G999
S506
S606
LEFT FRONT DOOR LOCK SWITCH
LEFT FRONT WINDOW SWITCH
RIGHT FRONT DOOR LOCK SWITCH
RIGHT FRONT WINDOW SWITCH
S504
S604
S303
G305
S331
GRY/ BLK
VF DIM
PWM DIM
DRIVER INFORMATION DISPLAY
A6
B8
RADIO REAR SEAT AUDIO CONTROL
S395
POWER SLIDING DOOR OPEN/CLOSE SWITCH
POWER SLIDING DOOR SWITCH
REAR POWER QUARTER WINDOW SWITCH
INTERIOR LAMPS OVERRIDE SWITCH
INTERIOR LAMP & MULTI-FUNCTION SWITCH
S390
132720